Astemes Mocking Exercise

Astemes - Anton Sundqvist

Anton Sundqvist

Copyright © 2024 Astemes

Table of contents

1. Mocking Exercise 3
2. Prerequisites 4
3. Exercise 1 5
   - 3.1 First test 5
   - 3.2 Refactoring 9
   - 3.3 Addressing Addressing Issues 9
   - 3.4 Controlling the Outputs 10
   - 3.5 Adding more Tests 11
   - 3.6 Setting Multiple Bits 12
   - 3.7 Final thoughts 13
4. License 14
   - 4.1 Astemes Mocking Exercise 14

Copyright © 2024 Astemes

1. Mocking Exercise

This exercise introduces the concept of using mocks to test code. You will complete it using test driven development l, so you will be writing a test, make it pass and refactor. This cycle is repeated until the exercise is done.

To start, the instructions will be rather detailed, and as the exercise progresses you will be given less instructions about the basics of the tools used.

The exercise is designed to be close to something you could actually run into. It is not a toy example and we will write code which could actually be used. Because of this, you will get more information than needed in the exercise and you will have to ignore information irrelevant to the task.

Copyright © 2024 Astemes

2. Prerequisites

To get started you will need to have LabVIEW installed get the tools setup. Follow these steps if you do not already have everything ready. Install LabVIEW 2020 or later Clone the exercise branch of therepository Install the tools in the .vipc file found at the top level of the repository If you are new to LUnit, watch the instruction on this link

The .vipc file will install LUnit and LMock using VIPM.

Copyright © 2024 Astemes

3. Exercise 1

During this first exercise we will implement the digital output functionality of the I/O Expander. Make sure that you have cloned the repository and checked out the branch called `exercise-starting-point`. This should give you a folder called *source* containing a LabVIEW project file, some boilerplate code and the datasheet for the MCP23017 which we will be using.

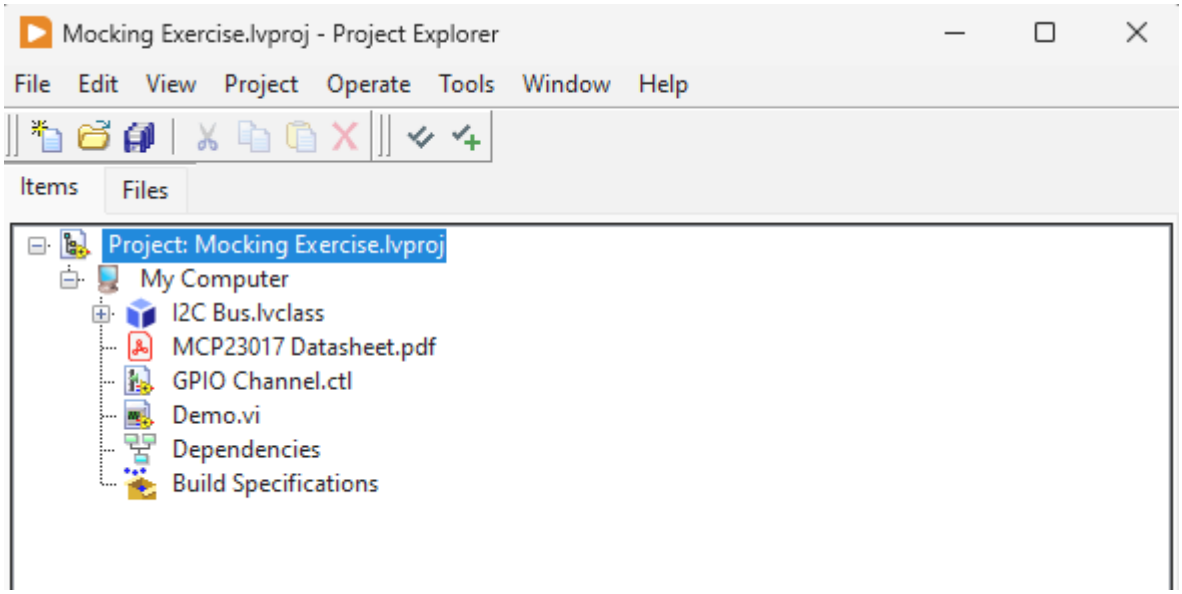

Open the LabVIEW project, which contains an abstraction for the I2C bus and the data sheet for the MCP23017. Have quick skim through the data sheet to get familiar with the device. Don't spend too much time on it, but familiarize yourself with how the device is addressed and the registers IODIRA, IODIRB, GPIOA, and GPIOB. We are not going to use any other registers.

If you have never worked with an I2C bus before, just ignore the details and assume it is a bus which you may either write to or read from by giving an address. The data type of both operations is a byte array.

3.1 First test

We will now begin to implement the digital output functionality on port A of the MCP23017. So in the spirit of Test Driven Development, we will begin by creating a test. To do this, click on the New LUnit Test Case button in the toolbar and name it `MCP23017 Test.lvclass`.

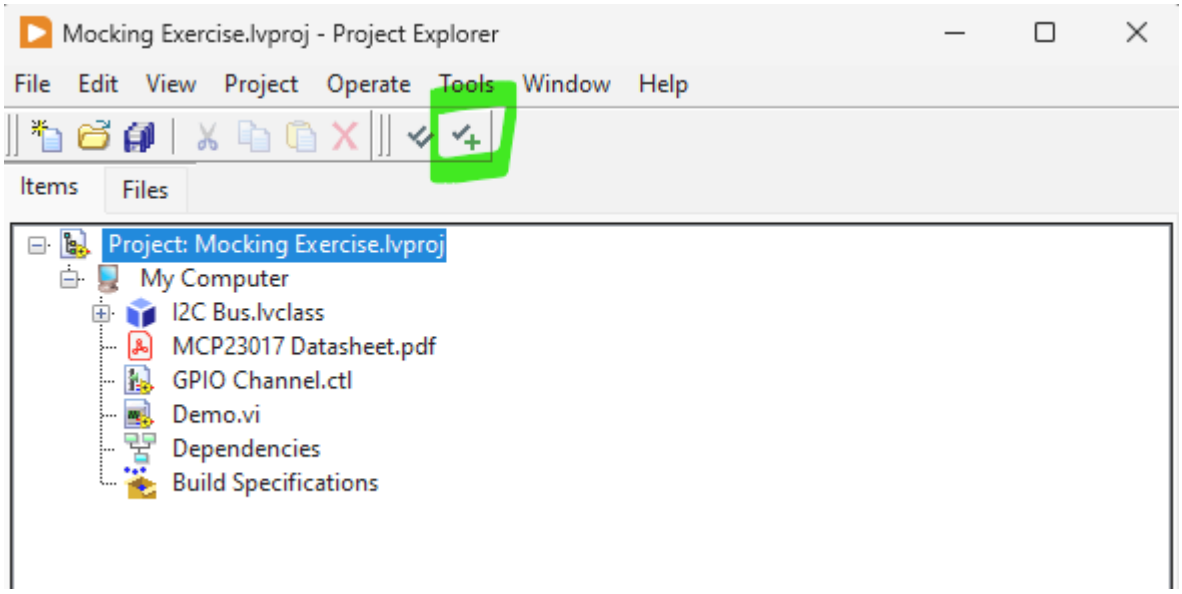

Copyright © 2024 Astemes

We will keep the *tests* directory on the same level as the *source* directory and the test case should be saved within the directory.

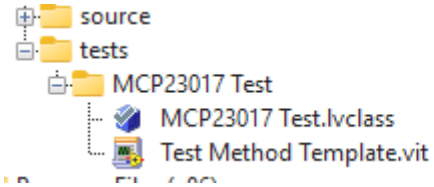

Now, create a new test method by right clicking the `Test Method Template.vit` in the project and select `New from Template`. Save the VI and run it, at this point the name does not matter as long as it begins with the four letters `test`. You should see it failing (obviously), but this is a good check to see that you have the tools setup and working. You can also run all tests in the project from the toolbar button.

Next, let's consider what we should be testing. Reading to the datasheet we can see that the IODIR registers IODIRA and IODIRB needs to be configured to make the pins working as outputs. The register is a 8-bit, single byte, register and we will need to write a `0x00` to the register.

3.5.1 I/O DIRECTION REGISTER

Controls the direction of the data I/O.

When a bit is set, the corresponding pin becomes an input. When a bit is clear, the corresponding pin becomes an output.

REGISTER 3-1: IODIR: I/O DIRECTION REGISTER (ADDR 0x00)

R/W-1	R/W-1	R/W-1	R/W-1	R/W-1	R/W-1	R/W-1	R/W-1
IO7	IO6	IO5	IO4	IO3	IO2	IO1	IO0
bit 7							bit 0

Legend:			
R = Readable bit	W = Writable bit	U = Unimplemented bit, read as '0'	
-n = Value at POR	'1' = Bit is set	'0' = Bit is cleared	x = Bit is unknown

bit 7-0 **IO<7:0>:** Controls the direction of data I/O <7:0>
1 = Pin is configured as an input.
0 = Pin is configured as an output.

Now, how can we test this? We can see that IODIRA is located at register address `0x00` and we will for now assume that the device uses I2C address of `0` (we'll get back to revisit this later). So we need to verify that when initializing our driver for the MCP23017, the two bytes [`0x00`, `0x00`] are written to device address `0`.

To achieve this, let us begin by creating a mock of the I2C bus. Do this by right clicking the I2C Bus interface in the LabVIEW project and select `Mock...`.

Copyright © 2024 Astemes

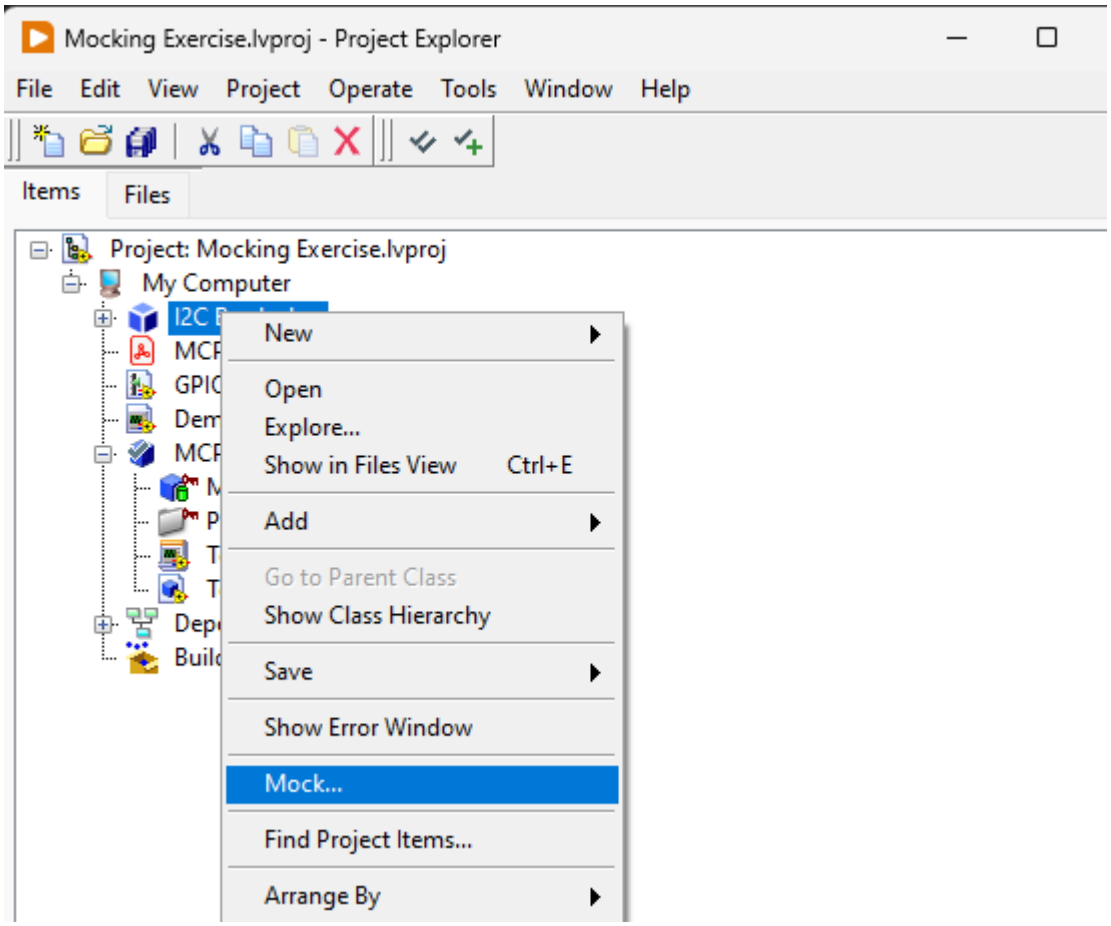

Save the test double within the tests folder using the suggested name. Now, we will begin to implement the test we created by using the mock class. You will find the `Create.vi` and `Write.vi` in the generated mock class, and the `One.vi` and `Verify.vi` are both part of the LMock API and found on the pallette or using quick drop.

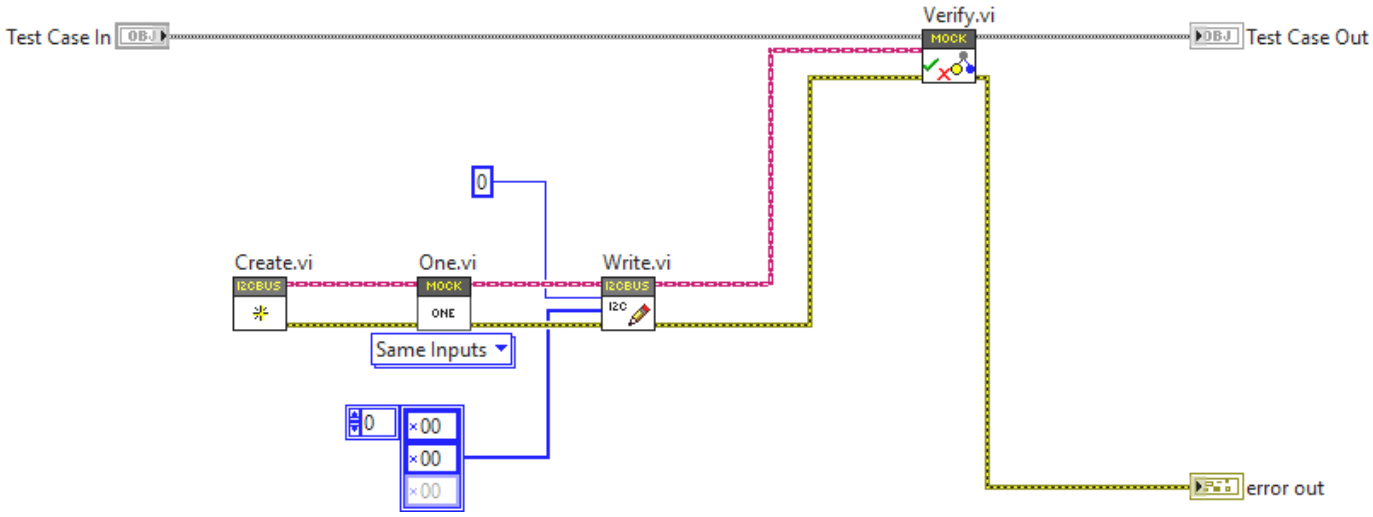

Run this test to see that the mocking framework works as expected. You should se a failing text with a description as below.

Copyright © 2024 Astemes

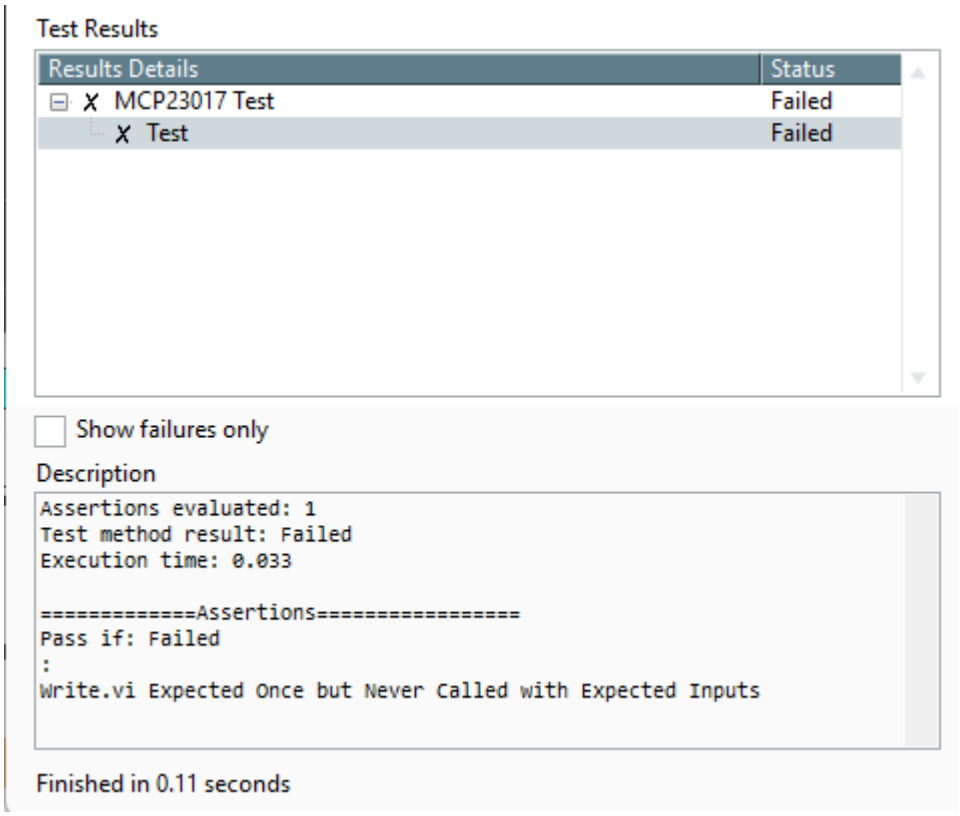

View the description reported by the mock verification and make sure you understand how this test works. The test can, of course, not pass yet as we have nothing acting on the I2C Bus, so the declared expectation cannot be fulfilled.

After some work we have finally arrived at a failing test that actually tests something useful. Except we are not calling any of our code - we have not even written any code yet! So lets fix that.

Add a class the the project and call it `MCP23017.lvclass`. Create a constructor for the class taking the `I2C Bus.lvclass` interface as an input and wire this into the test as shown below. While at it, maybe rename the test to something more meaningful, such as `Test IODIR Configured as Output on Create.vi`

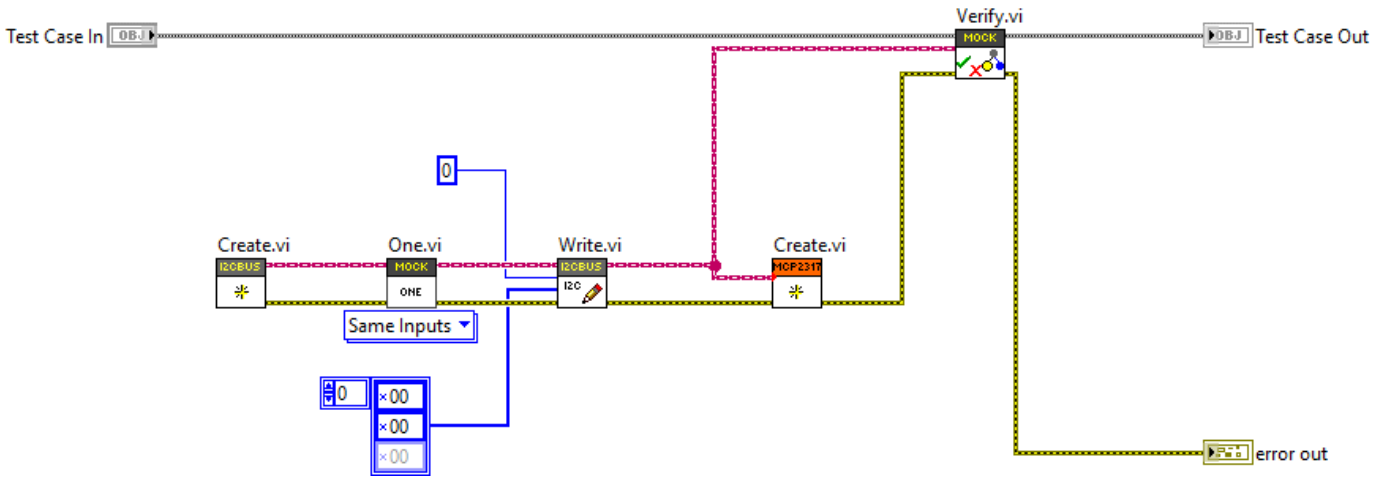

And at last we are allowed to write some actual code. This should be trivial, so go on and make the test pass.

Copyright © 2024 Astemes

3.2 Refactoring

Since we have passing test, next let's clean up what we made some. Refactoring is the process of making structural changes to the code without changing the behavior. There is not a lot of code to work with, but there should be a few things we can improve. Feel free to work the code until it is readable, but here are some ideas on what can be done about it.

- The code setting the IODIRA register would go well in a subVI with an appropriate name. This VI should be made private to the class.
- The array of bytes fed to the I2C `Write.vi` contains some magic numbers. You could replace the first byte with something more readable, such as a ring or enum.
- If you decide to create a ring representing the register address, it should be made into a private type definition of the class.
- Avoid adding more than the first element to the ring for now. We still do not know which registers we are going to address and by only adding the ones we need there is a minimal amount of code we need to change later if we change our minds. Also adding registers we are not yet supporting will make the API confusing as we would need to know about the implementation in order to know which registers we may call.
- Once you have replaced the first `0x00` with something readable, you should be able to identify a chunk of code making a nice subVI.

The last VI would actually encapsulate a core concept, which we will leverage moving forward. A suitable name for the VI would be `Write Registers.vi`, and ths should also be private to the class. It would look something like below.

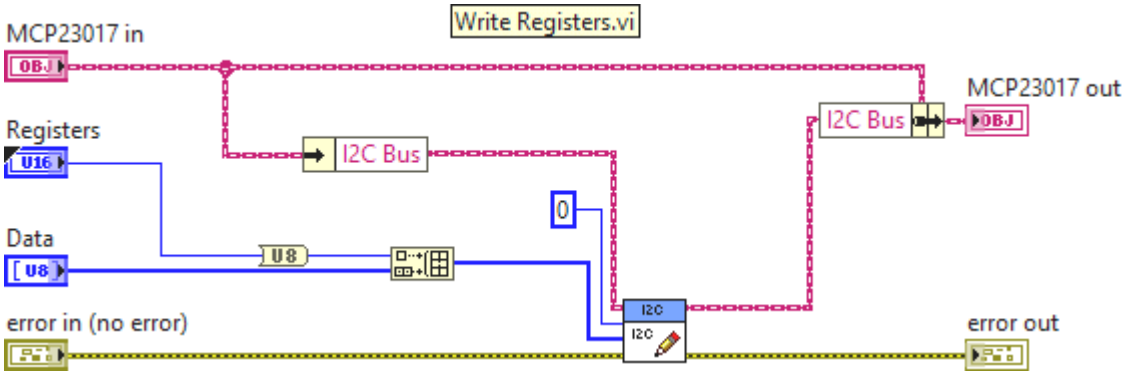

You should do the refactoring in small steps and always run all tests touching the refactored code between each change. In this way you can be sure you are not changing the behavior.

If the above was unclear, you can always check out the `solution` branch and revert to the commit called "Refactoring after first Test".

3.3 Addressing Addressing Issues

Now we have managed to write the IODIRA register, but we took some shortcuts. One thing we did was hardcode the I2C address of the MCP23017, let us address this.

The address of the device can be configured by pulling the addressing pins of the device either high or low. There are three bits, allowing for 8 different addresses. Refer to the datasheet for details, but for now we need to consider the figure below.

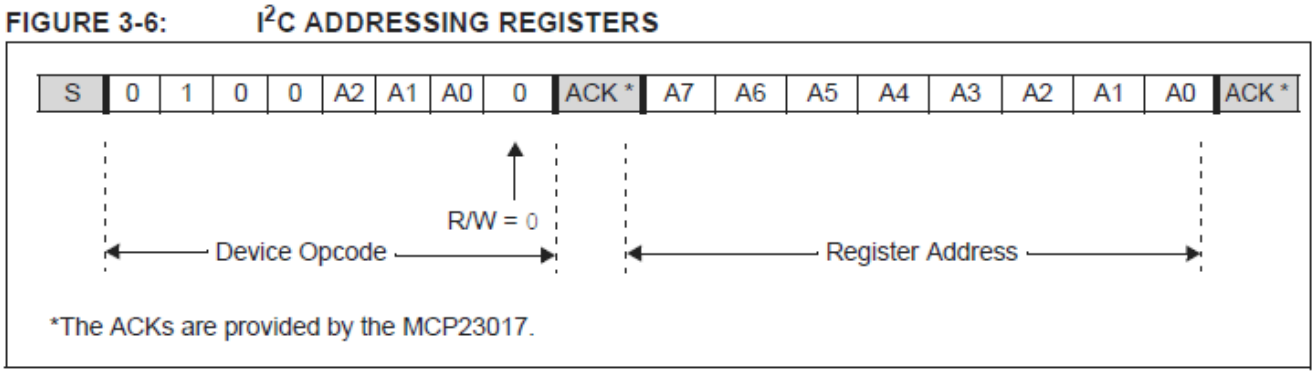

Copyright © 2024 Astemes

Looking at this we see that our code written earlier is actually wrong. When the registers are all pulled low, we do not get an I2C address of 0: we get the address 0 masked with the binary number `0b00100000`. Let's fix that by updating our first test.

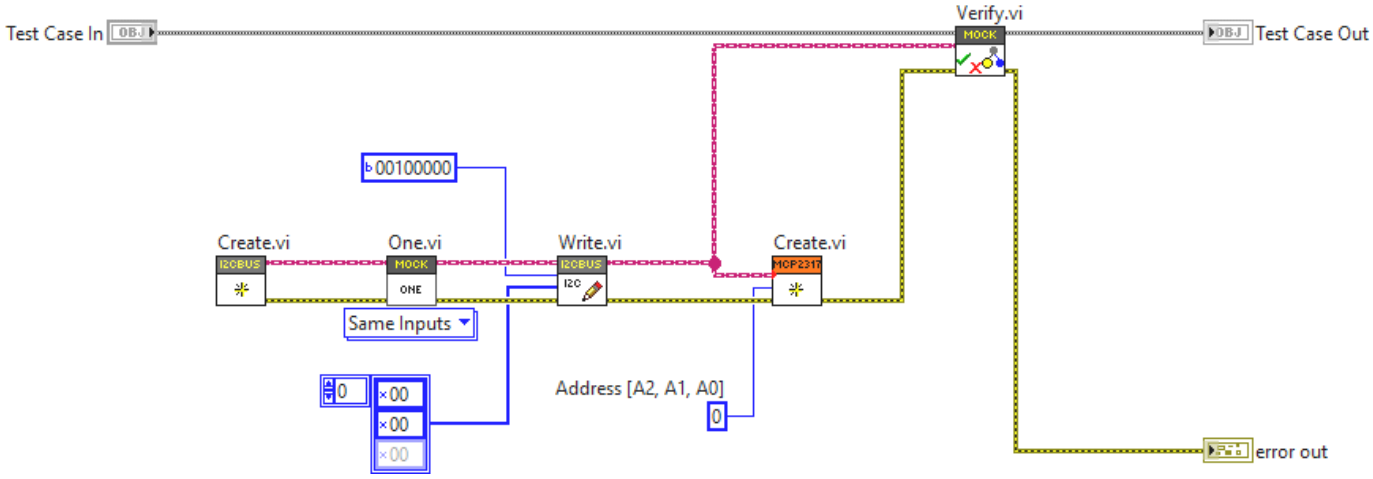

We added an input to the constructor, which feels like an appropriate place to define the address used. We then changed the 0, which we added earlier as a placeholder, to `0b00100000`. Now the test fails again and we should make it pass. This should again be trivial - update the value of the constant from earlier.

Now, we still have the address hard coded (unless you did more than you needed to earlier). To resolve this, we need to add another test showing what should happen for *e.g.* address 2. A pro-tip here is to save a copy of the previous test, as this will just be a slight variation of it.

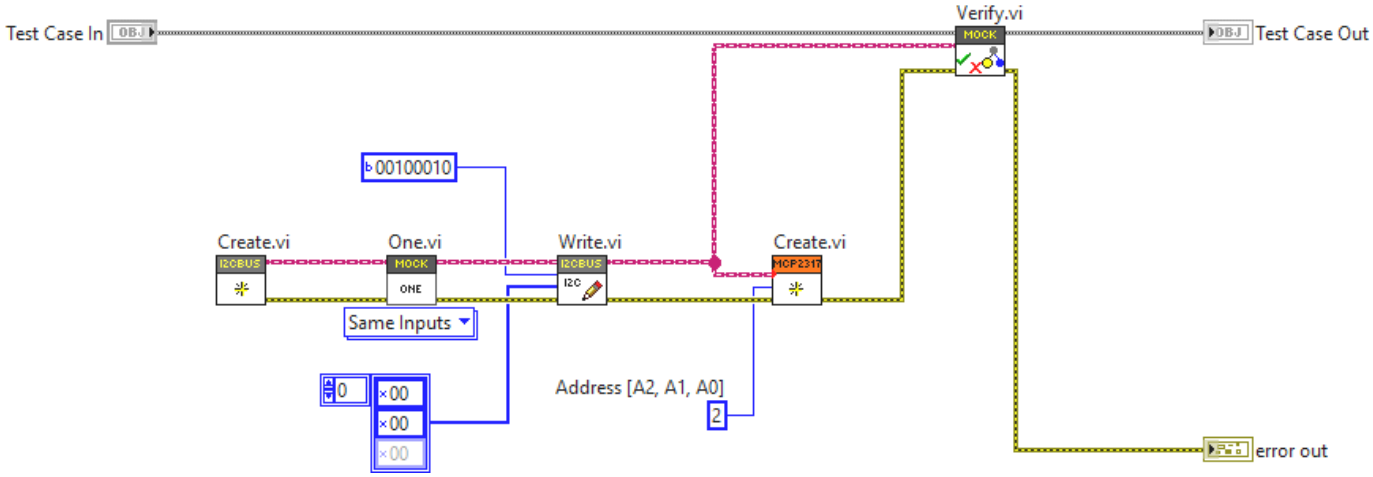

Now we have a failing test and we need to actually use the value of the address provided to the constructor in order to make both our tests pass. The implementation should be straight forward, but if you need help look at the "Test 2 Passing" commit of the solution branch. Not much refactoring to do, so let us move on to the next test.

3.4 Controlling the Outputs

Now when we have the port configured as an output, we can start updating it by simply writing to the GPIOA register `0x12`. Reading the datasheet we discover that this is done similar to earlier, by first setting the register pointer and then setting the value. As a requirement, we will assume that we want to be able to set the bits individually and not write the whole port at once. This will impact what our API looks like and will require us to handle the state of the port somehow, but we will consider that later. Baby steps.

A good first test would be to set GPIOA0, which is the first bit on the A port, to 1. We will now need to add a second public VI to our class and the API could look like below, using the enum type definition provided with the project.

Copyright © 2024 Astemes

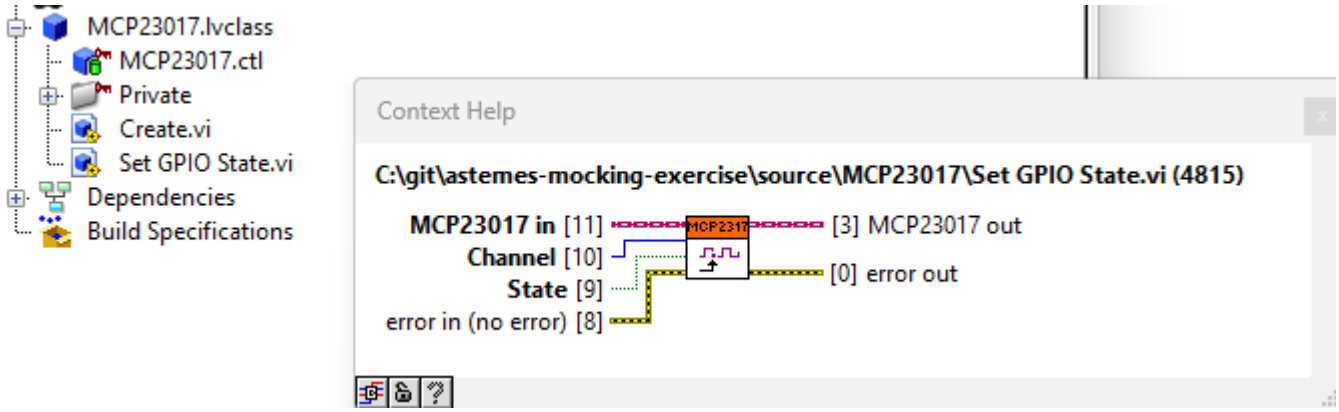

The test would look like below.

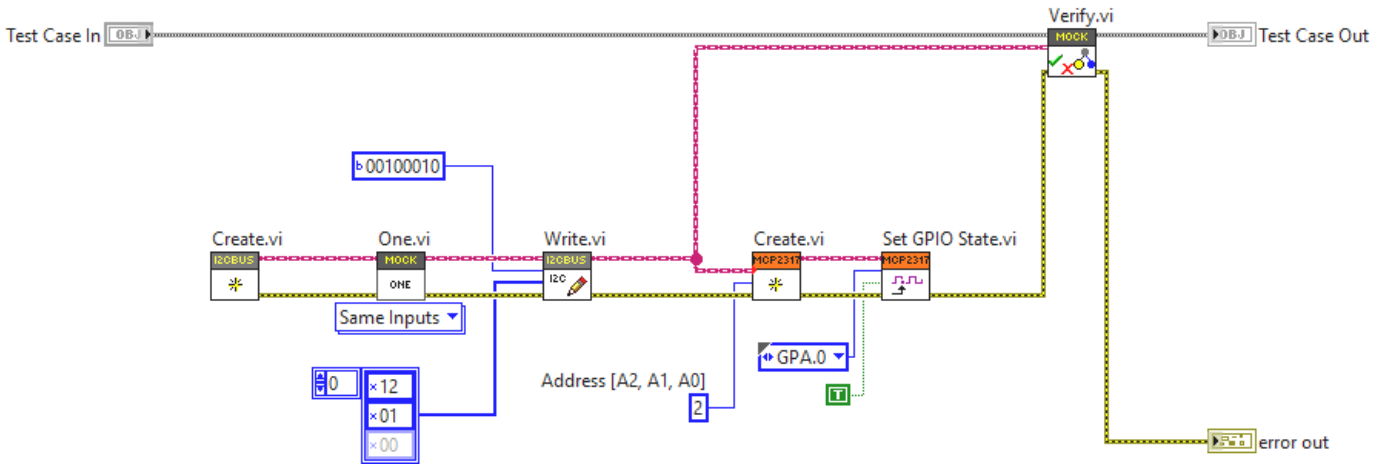

Making this test pass is again easy. Remember, it is okay to just use constants on the block diagram as long as all tests still pass. Depending on how you solved it, there might be opportunity for refactoring. Keep in mind that we already created a VI for setting a register and a type for the register address. The type can be extended and the VI can be reduced, and the result is that we have no duplication of logic. If we would not have discovered the refactoring opportunity after the first test, we would likely sense it now as the logic is the same for setting the registers.

3.5 Adding more Tests

We are able to set the first bit on the A port, but that is not good enough. Let us add another test to set another bit. The choice of which bit is arbitrary, but it is usually good to check edge cases.

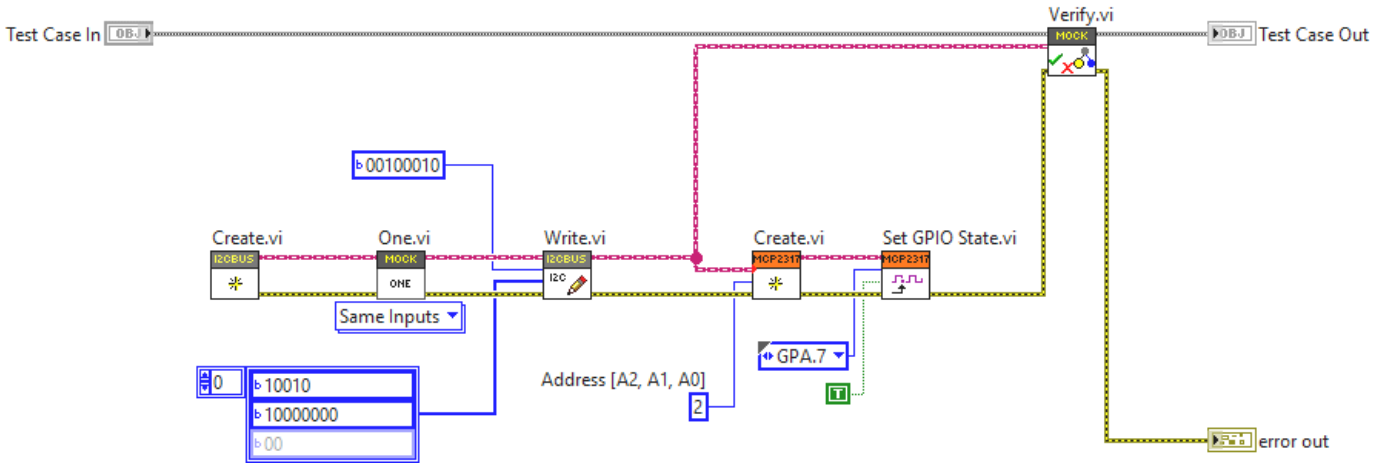

To make this pass we need to do some bit shifting, but I'm sure you will figure this one out.

Copyright © 2024 Astemes

The next thing to could be to write to the B port. In this case we will get a test like below.

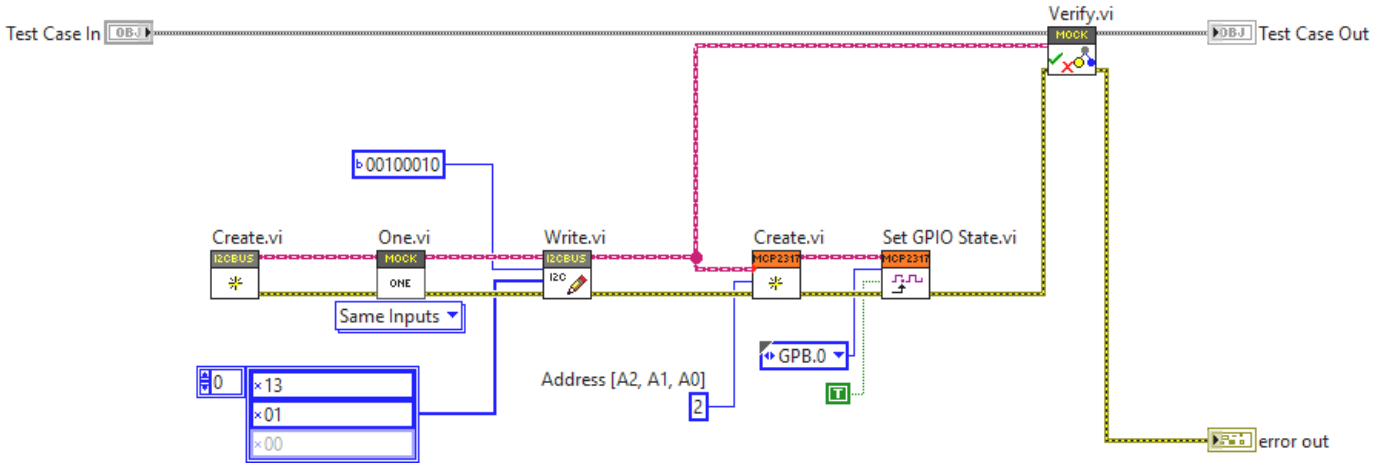

Now there is actually two different things making this test fail. The register needs to be `0x13` and there will be an overflow on the byte and we need to add some kind of modulo operation. When you have the test passing, the block diagram is getting a bit crowded and it is good time to do some refactoring. You could identify the "Channel to Bitmask.vi" and "Channel to Register.vi" as shown below.

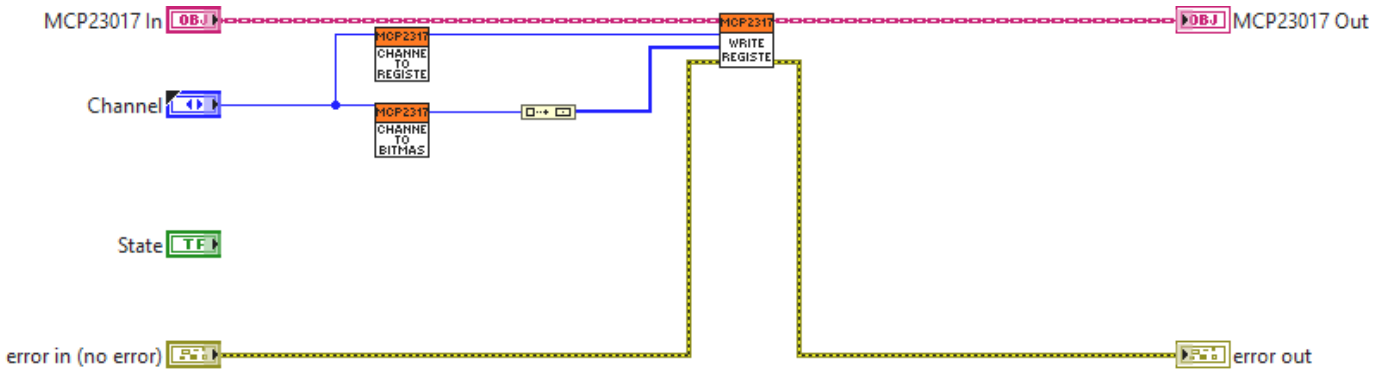

3.6 Setting Multiple Bits

So far, so good. But we still have a problem. If we were to set two bits in the same port, the second operation would undo the first. This is shown by the test below.

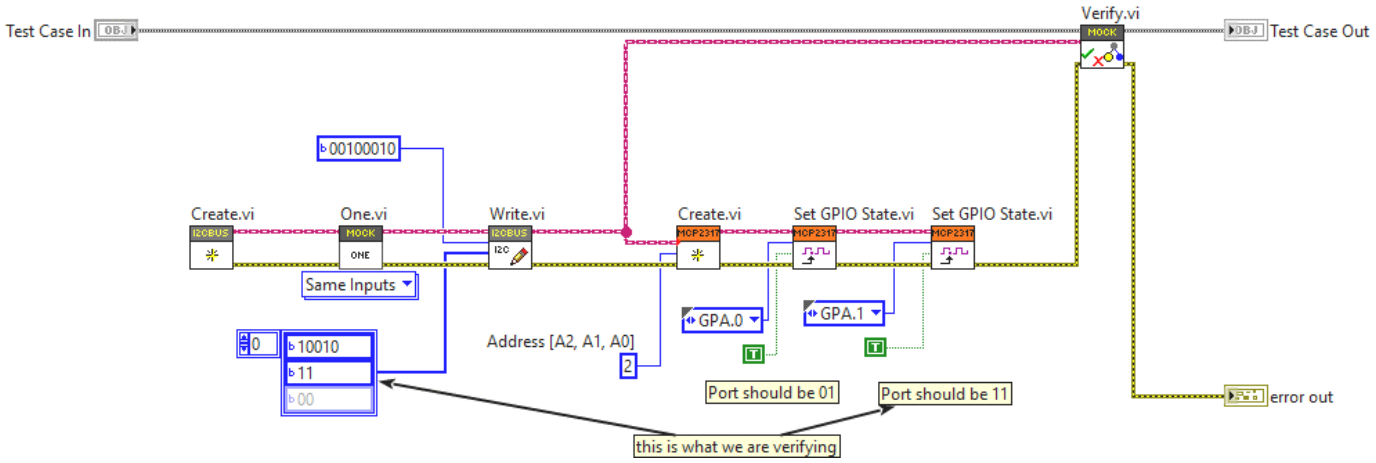

In order to make this one pass, we will need to track the state. The "Channel to Bitmask.vi" comes in handy.

Once you have got that one passing, there is not much left. Except, we cannot set a bit low. That is silly and the test below should fail.

Copyright © 2024 Astemes

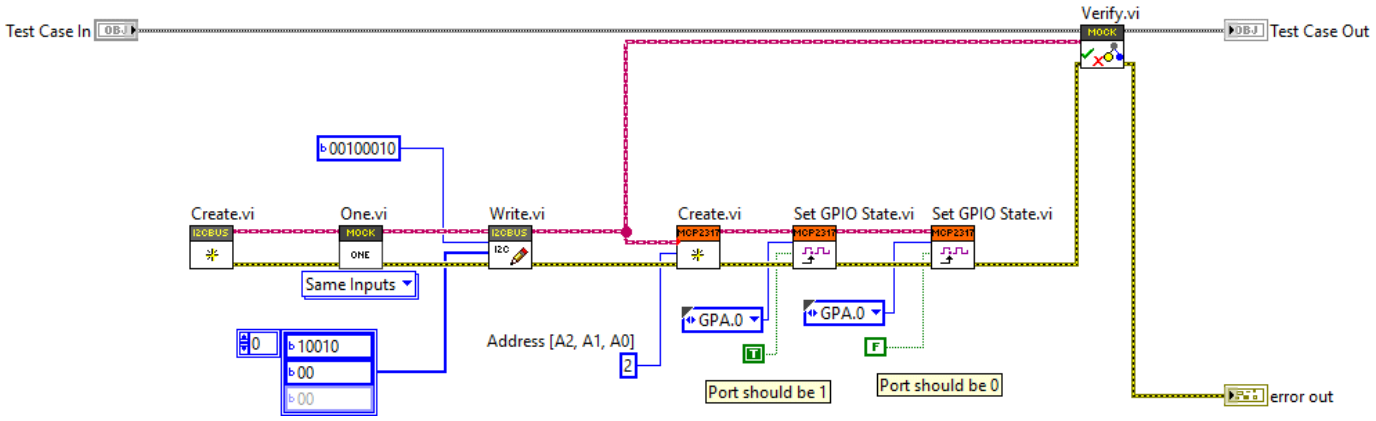

Once we have the test passing we can again start to consider the structure of the code and improve the readability. By separating the calculation of the state from the call to the I2C bus, the operation may be split into two parts as below.

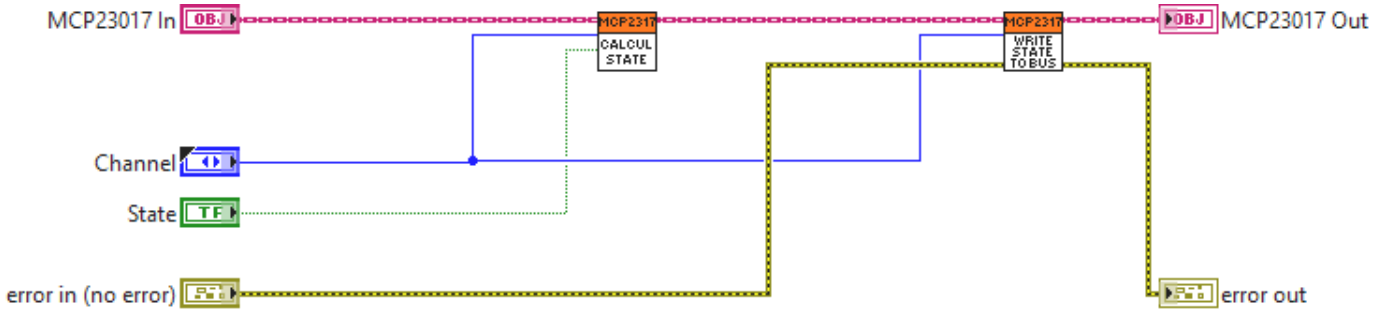

And now, we only have one problem left. We only have one state, but two ports. So updating one port will mirror to the other, as is shown by this failing test.

If it is not clear what failed, have a look at the failure description. `Address: 34(U8) == 34(U8), Data: [19, 2](U8) != [19, 3](U8), error in (no error): No Error(Cluster) == No Error(Cluster)` The value written to the B port should have been 2 (binary `0b10`), but we got the first bit mirrored from port A. To resolve this, you will need to make the states specific to each port. At this point I actually decided to inline the "Channel to Register.vi", and this is normal during refactoring. Something which made sens 10 minutes ago might not have been such a good idea after all.

3.7 Final thoughts

At this point we have fully implemented the functionality needed to use the MCP23017 as a digital output device. If you wanted to use the B port as output, that too would need to be configured on creation. I plan to continue this exercise to show how we can implement port B as an input, if there is any interest for such an exercise.

Copyright © 2024 Astemes

4. License

4.1 Astemes Mocking Exercise

MIT License

Copyright (c) 2024 Astemes - Anton Sundqvist

Permission is hereby granted, free of charge, to any person obtaining a copy of this software and associated documentation files (the "Software"), to deal in the Software without restriction, including without limitation the rights to use, copy, modify, merge, publish, distribute, sublicense, and/or sell copies of the Software, and to permit persons to whom the Software is furnished to do so, subject to the following conditions:

The above copyright notice and this permission notice shall be included in all copies or substantial portions of the Software.

THE SOFTWARE IS PROVIDED "AS IS", WITHOUT WARRANTY OF ANY KIND, EXPRESS OR IMPLIED, INCLUDING BUT NOT LIMITED TO THE WARRANTIES OF MERCHANTABILITY, FITNESS FOR A PARTICULAR PURPOSE AND NONINFRINGEMENT. IN NO EVENT SHALL THE AUTHORS OR COPYRIGHT HOLDERS BE LIABLE FOR ANY CLAIM, DAMAGES OR OTHER LIABILITY, WHETHER IN AN ACTION OF CONTRACT, TORT OR OTHERWISE, ARISING FROM, OUT OF OR IN CONNECTION WITH THE SOFTWARE OR THE USE OR OTHER DEALINGS IN THE SOFTWARE.

Copyright © 2024 Astemes